QUADRASPIRE PRICE LIST OCTOBER 2020

(prices are subject to change without notice /wijzigingen voorbehouden)

Quadraspire

LATHAM

Q4 HIFI RACKS

Price includes one shelf & one set
of 19mm or SV32mm columns/feet

Q4EVO

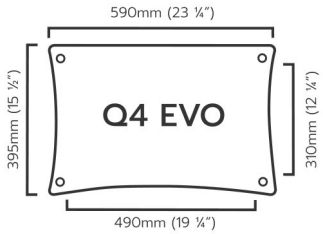

Shelf Finish 1	19mm	SV32mm
Bamboo Cherry Bamboo Dark Bamboo Black Bamboo	€ 200	€ 270
Cherry Oak Black Dark Oak	€ 180	€ 250

Q4MIDI CUSTOM

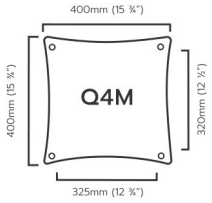

Bamboo Cherry Bamboo Dark Bamboo Black Bamboo	€ 180	€ 250

Q4LARGE CUSTOM

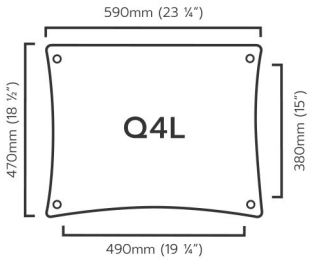

Bamboo Cherry Bamboo Dark Bamboo Black Bamboo Cherry Oak Black Dark Oak	€ 240	€ 300

QAVM AND QAVX SHELF PRICES AVAILABLE ON REQUEST

Q4 WALL BRACKET

Price includes Black Bamboo Wall
bracket with a Shelf & SV Spike feet

Product	Shelf Finish	Black/Silver Feet	Bronze Feet
Q4EVO Wall Bracket	Bamboo Cherry Bamboo Dark Bamboo Black Bamboo	€ 415	€ 850
	Cherry Oak Black Dark Oak	€ 375	€ 815
Q4Large Wall Bracket	Bamboo Cherry Bamboo Dark Bamboo Black Bamboo	€ 450	€ 890
	Cherry Oak Black Dark Oak		

All prices are including 21% VAT/Alle prijzen zijn inclusief 21% BTW.

Latham Audio B.V. www.latham.nl / Tel: +31 (0)13 5082411

QUADRASPIRE PRICE LIST OCTOBER 2020

(prices are subject to change without notice /wijzigingen voorbehouden)

Quadraspire

LATHAM

SVT HIFI RACKS

Price includes one shelf & one set
of SV32mm columns/feet

SVT

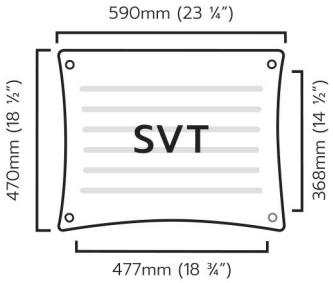

Bamboo
Cherry Bamboo
Dark Bamboo
Black Bamboo
Cherry
Oak
Black
Dark Oak

€ 375

SVT Large Custom

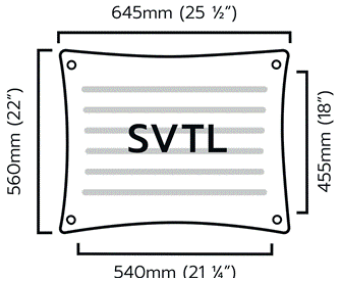

Bamboo
Cherry Bamboo
Dark Bamboo
Black Bamboo

€ 475

SV2T Custom

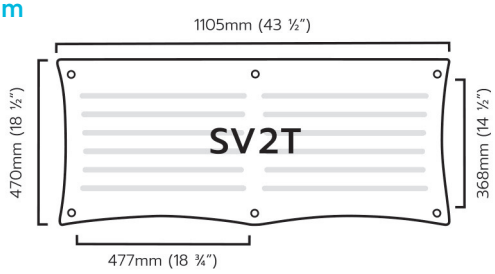

Bamboo
Cherry Bamboo
Dark Bamboo
Black Bamboo
Cherry
Oak
Black
Dark Oak

€ 660

SV3T Custom

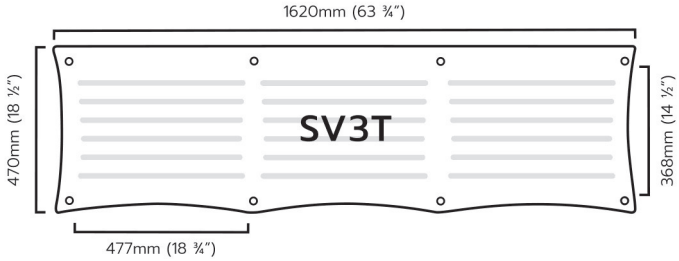

Bamboo
Cherry Bamboo
Dark Bamboo
Black Bamboo

€ 1000

SVT Wall Bracket

Price includes Black Wall bracket with a Shelf & Spike feet

Shelf Finish	Black/Silver Feet	Bronze Feet
Bamboo	€ 525	€ 975
Cherry Bamboo		
Dark Bamboo		
Black Bamboo		
Cherry		
Oak		
Black		
Dark Oak		

All prices are including 21% VAT/Alle prijzen zijn inclusief 21% BTW.

Latham Audio B.V. www.latham.nl / Tel: +31 (0)13 5082411

QUADRASPIRE PRICE LIST OCTOBER 2020

(prices are subject to change without notice /wijzigingen voorbehouden)

Quadraspire

LATHAM

XREFERENCE HIFI RACKS

Price includes X shelf & SVT shelf & 1 set of columns/feet as well as 1 set of Bronze Upgrade

XReference

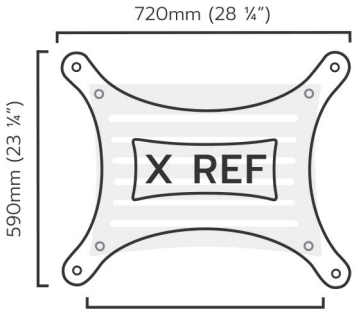

Bamboo Cherry Bamboo Dark Bamboo Black Bamboo	€ 1375

Signature XReference

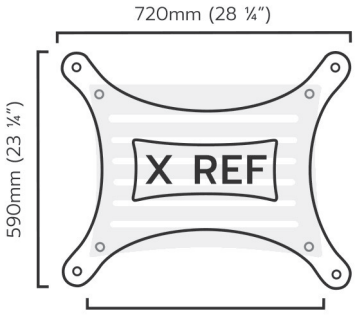

Nextel Bamboo	€ 1750

Q4EVO & SVT Rack Accessories

Price per set of 4

19mm Columns
100,140,180,
216,256 or 326
Black or Silver
€ 65

19mm Feet
spikes & flat feet
Black or Silver
€ 65

SV32 Columns
100, 140, 180,
216, 256 or 326
Black or Silver
€ 130

SV32 Feet
spikes feet
Black or Silver
€ 130

Price per set of 4

QC
stainless steel
€ 55

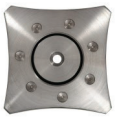

QX7
stainless steel
€ 160

QCST Castors
chrome
€ 115

Bronze Upgrade
€ 550

All prices are including 21% VAT/Alle prijzen zijn inclusief 21% BTW.

Latham Audio B.V. www.latham.nl / Tel: +31 (0)13 5082411

QUADRASPIRE PRICE LIST OCTOBER 2020

(prices are subject to change without notice /wijzigingen voorbehouden)

Quadraspire

LATHAM

QPLUS HI-FI SUPPORTS

QPlus EVO

Set of 4	**€ 150**
Set of 3	**€ 115**

QPlus ADVANCED

Set of 4	**€ 375**
Set of 3	**€ 290**

QPlus Reference

Set of 4	**€ 1125**
Set of 3	**€ 850**

Q6014 SPEAKER STANDS

Bamboo **€ 415**
Black Bamboo

Q6014 SPEAKER STANDS

Bamboo **€ 125**
Black Bamboo

QPLUS HI-FI SUPPORTS

HiFi Qube

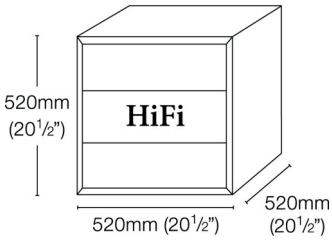

Cherry **€ 375**
Oak
Black
Dark Oak

New LP Qube

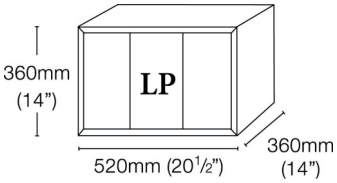

Cherry **€ 250**
Oak
Black
Dark Oak

New DVD Book Qube

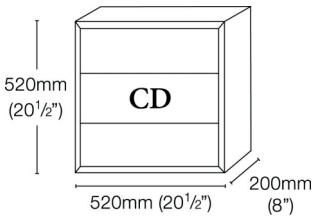

Cherry **€ 190**
Oak
Black
Dark Oak

Qube Doors Clear or Sand-Blast Glass	**€ 115**
Adjustable Feet	**€ 65**

All prices are including 21% VAT/Alle prijzen zijn inclusief 21% BTW.

Latham Audio B.V. www.latham.nl / Tel: +31 (0)13 5082411